Strawbridge Challenge Design Guide

2006 Competition
Revision – Nov. 2005

Prepared by
Baltimore ASME Section
Paul Borthwick
Sheila Glesmann
Niel Leon

ASME International

Baltimore Section

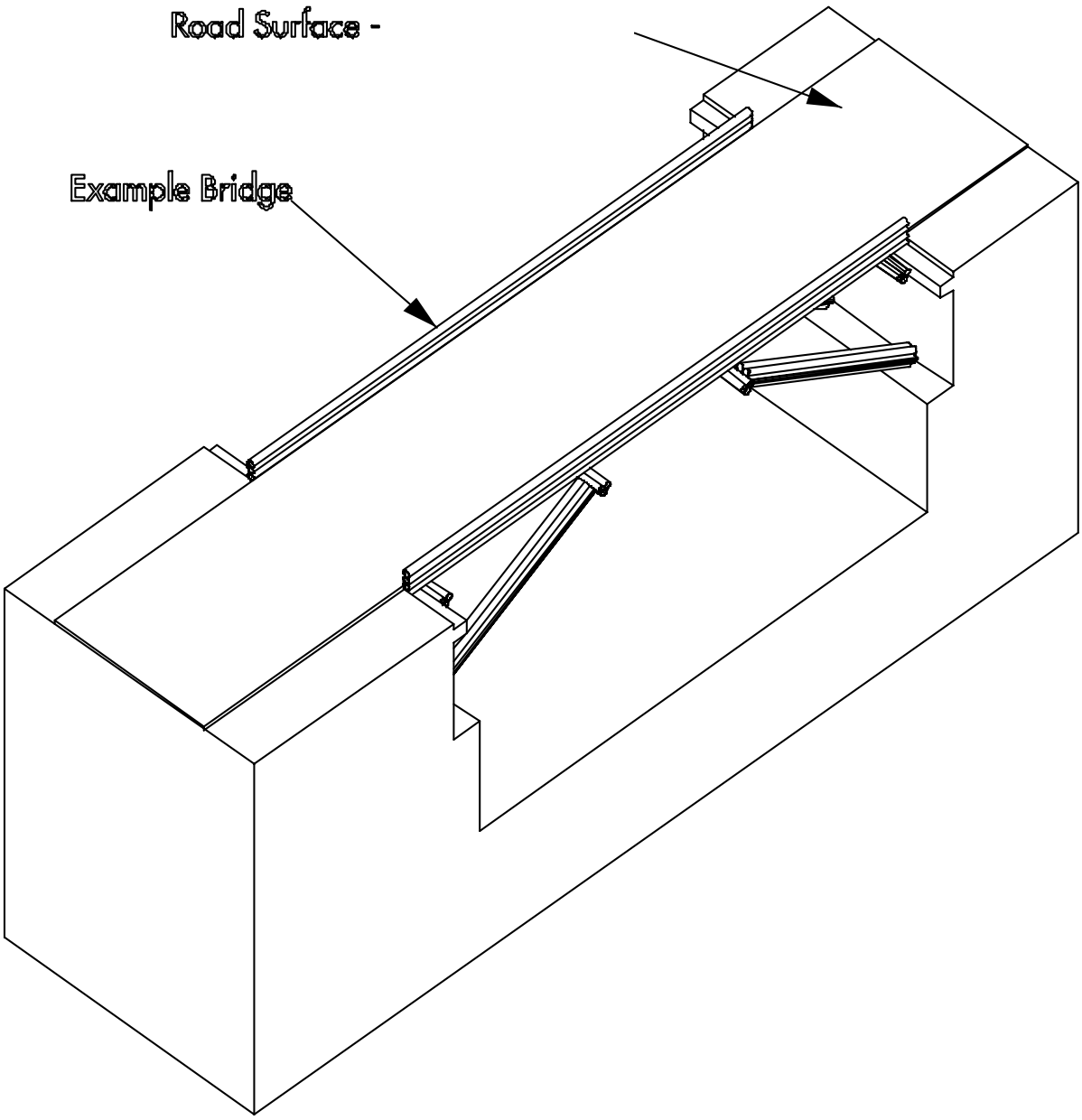

Orthogonal Sketch of Simple Bridge
Shown Over Hazard
Road bed must be at least 6"wide

1. Purpose:

The purpose of this design guide is to give the mentors and students some guidance on how to design their bridges, and insight into the philosophy of both the challenge and the rules. This design guide is also used to clarify the rules.

2. Challenge Philosophy

The main purpose of this challenge is to encourage students to look at the technology that surrounds them and to encourage them to attempt to understand the underlying principles. For bridge building, some of the most important are: strength of materials, forces and moments in equilibrium, moment of inertia and how to use them to our advantage for bridges and other building structures. The mathematics and science may be beyond their complete understanding, but a basic introduction to the principles is not, and can be used as an introduction to engineering and physical sciences and to capture their intellectual curiosity.

We encourage mentors and teachers to use this challenge to inject supplementary educational material that will help your students to understand the principles.

In past years the most successful bridges were done by students who understood what the design constraints of the materials involved, and used them successfully.

Get your students to test the sub-components of their design before they actually build a bridge. Have them investigate different joint and structural sub-systems before taking on a complete bridge.

The organizers of this contest feel that every student group that successfully meets the design criteria of this challenge has **successfully met the challenge** and will be awarded a certificate of completion**.** At the same time we would like to stimulate creativity. This is why we are awarding prizes for the design that has the greatest strength-to-weight ratio.

The presentations (oral and written reports) given to discuss design technique will be used to evaluate the challengers understanding of the development process of their bridge as well as their understanding of the underlying fundamentals of bridge design. Winning of individual prizes will be based on the criteria provided in the contest rules that you have already received.

3. Interpretation of Rules:

The rules were designed to maximize creativity by the students. The process of engineering is a matter of understanding constraints to a problem or challenge and using available materials to overcome them. In many cases this means taking advantage of physical laws or mechanical principles to solve a unique problem.

Just as in the real world the competing teams will be asked to present and defend their designs. This gives them the opportunity to: show that they have met the design criteria, discuss the design principles used, explain why the design is optimal, and give examples of what did not work.

The straws are to be the **primary structural** component. They should be used to build the structures that support the bridge. The other materials (glue, plastic tabs and the cardboard roadway) are only there to help the straws do their job.

Additionally the students must be able to explain why the materials meet the specifications. Engineering firms are often required to certify the materials to certain specifications. (e.g. The steel or concrete in a bridge must meet very clearly defined materials specifications.)

Example:

> Materials - Hotmelt glue - The students must be prepared to prove that the glue is properly used for the types of plastic utilized in the straws. Having your students supply with their report, a label or wrapper to show the type of hotmelt glue used is a way to show the materials met specifications. Also bringing samples to the oral presentation is a way to emphasize this section in the report. *As regular Hotmelt glue tends to melt the straws, low temperature Hotmelt glue is strongly recommended.*
>
> This documentation may be presented in the written report.

4. Rule Clarifications:

As questions come up clarifications to the rules will be distributed to all competitors where appropriate but not if they would give away the competitive advantage of the students asking the question.

4.1 Truck

The truck to be used for the load on competition day is an approximate 1/64th Hot Wheels® scale 18 wheeler. There are number of these trucks for the various NASCAR racing teams.

The truck will be loaded with lead so its total weight is 6.5 pounds. The lead will be placed in the semi-trailer and not in the tractor.

The truck is approximately 14 inches long, 1.625 inches wide and 2.625 inches tall. Maximum wheelbase is 11.5 inches and wheeltread is 1.625 inches.

For testing purposes consider a single "standard" brick used for house and building construction. This will be close to the size and weight of the truck.

4.2 Shirt cardboard or Posterboard

This material is to be used for the road surface only and cannot provide structural strength to the bridge. The maximum thickness of the material is 1/32″ thick.

The road deck **must not** be permanently attached to the bridge. This information is provided for your testing only. **At the competition the judges will supply a road surface for the bridge.**

4.3 Straws

The straws for the competition are manufactured by Sweetheart Cup. The straws are described as Sweetheart "JUMBO" straws. These straws are 0.231″ (approximately 15/64″) diameter and 7.25″ to 10″ long. The Sweetheart item number is either 722T for the 7.25″ variety or 732T for the 10″ variety. These would commonly be described as a regular drinking straw.

Every effort will be made to ensure that an adequate supply of Sweetheart straws is available to all challengers. If you have any shortages or questions please contact a contest coordinator. Although straws from other sources are permitted you should make a reasonable effort to ensure that they are the same specifications as those provided by BMI and contest coordinators. **Under no circumstances will "coffee stirrer", "mini" straws or drinking straws in considerable excess of ¼ inch diameter be accepted as construction material.** *As a caution, it has been observed many "supermarket" straws often are weaker in both bending and buckling than the regulation straws so it is usually to your advantage to obtain the regulation straws.*

Additional and Bulk Quantity Straws
For schools or school systems that are having several dozen groups build bridges and recognize that Sweetheart and ASME cannot reasonably provide that many straws there are at least two avenues for purchasing bulk straws:

Very often a school's cafeteria/foodservice department can obtain bulk quantities of straws through their regular supplier/distributor network.

A regional distributor that can be contacted directly is:
Acme Paper Company
1-800-462-5812 Ext. 1230, ask for Barbara.

Also as a note for the 2006 competition, Sweetheart Cup Company has been acquired by Solo Cup Company. As of the writing of this guide detail on changes in stocking numbers is currently unknown. Please contact Paul Borthwick at (410) 891-2255 (daytime) if you are having difficulty locating suitable straws.

4.4 Span

The bridge must span the **entire width** of the gap with **no interim supports**. The span is 20″ at the roadway surface. The ledges and vertical surface between the ledges may be used for support. This basic support scheme is depicted on the orthogonal sketch at the beginning of this guide.

4.5 Materials

- Straws of the size provided by Sweetheart Cup and available through BMI and challenge coordinators.
- Hot-melt glue. (low temperature recommended)
- Plastic sheet (for joints only) such as cut-up plastic milk jug or soda bottle materials.

These are the only materials that are allowed in the bridge.

5. Joints:

Joints are critical to the proper construction. While glue is necessary to the construction of the joints, excess glue does not add strength but does add weight. This is where small tabs of plastic (as noted in section 4.5) can be used to significant advantage.

The design and structure of joints are up to the imagination of the students.

REMEMBER: A key metric in the judging of the bridges is the strength to weight ratio! It is a good idea to have your students experiment with a number of shapes and ideas in the effort to determine an optimal design... just as a real engineering firm would in its design process.

6. Design & Construction Techniques to Consider

- What is the strongest basic structural unit? Why is it the strongest?

- Can any strength advantage be achieved by preloading the beams in the bridge? If so how should they be preloaded and by how much?

- How much stronger is a pillar as compared to a single straw? Does the design and construction of the pillar affect the strength?

-What joints can be used with the three basic materials given? How can the joints shown above be improved?

-Why are joints so important in the design of the bridge?

7. Hazard construction:

The hazard for this year's competition is identical to the one used in previous years. If your organization competed previously and built a hazard for testing you can use the same hazard for this year. See appendix A.

Testing:

Before your students actually build a bridge they should test individual components:

Trusses
Joints/Connections
Beams

By doing this, your students will better understand the properties of structures. They may need to design their own test equipment. Here are some of the questions the test equipment will provide answers to:

1. What is the best way to join two straws end to end?

2 How much extra bending strength is achieved with 3, 4, 6, 7 or more straws combined into a single beam? What is the best configuration of that beam and how should it be constructed? Is more bending strength gained by stacking straws or by laying them side to side.

3. Are equilateral trusses stronger than other truss styles? What about rectangular trusses.

4. How do joints effect the strength of your trusses and beams?

8. Test Fixture

To improve the understanding of the students and teachers the testing tool described in appendix A is proposed. There are other tests and testing fixtures that can be devised. Each school is responsible for fabricating its own test fixtures. These fixtures such as these can be used to test small structures built for destructive testing, followed by an evaluation of the failure mode of the structure. This can be educational on structural principles and can be used for classroom competitions.

9. Written Report

A written report is required. Its design and structure should be as a technical or engineering report. See the Maryland Engineering Challenges Written Report Checklist and Guide to Entry, 2006 Maryland Engineering Challenges.

Reports will be due at BMI, Monday, March 28, 2006.

As this is a challenge for performance of the bridge, the report should be concise but informative. Approximately ten double spaced typewritten pages in length is a guide but not a requirement, greater or fewer pages can be perfectly acceptable. It is recommended that reports that are prepared on a word processor utilize a 12 point "Times Roman", "Palatino" or similar typeface. Handwritten reports are also perfectly acceptable. They should be single spaced on regular 8-1/2 X 11 lined looseleaf notebook paper.

While some students have access to word processors and digital cameras and are comfortable with placing pictures in the body of the report electronically, this is not a requirement. Students who do not have or are not comfortable with the electronic equipment or techniques are encouraged to take regular snapshots and include them by taping them into the appropriate place in the report.

As a guide, Challengers should consider breaking their written report into the following or similar sections.

- Introduction: What is the paper about and why is this bridge being built. What are the basic rules, objectives and restrictions?

- Literature Review and Academic Research: What are some common bridge designs and how do they apply to the Straw Bridge Challenge. How do elements of the science of bridge building relate to the Straw Bridge Challenge?

- Experimental Research: Did you form any ideas of what might or might not work for your bridge design? How did you test them? What worked? What did not work? What were the conclusions from your tests.

- Conclusions and final bridge design and why you believe it is the best choice for the challenge presented.

- Drawings and Sketches: Drawings of your proposed and entered bridge design. Drawings should include more than one view of the bridge if possible and include a scale so the reader knows how many inches on the paper is equal to one inch of the real bridge. Example: ½" = 1". This would tell the reader that one half of an inch on the paper is equal on one inch on the real bridge.

- Bibliography: List all published materials, websites, software and other sources of information used in the research for your bridge design and report. It is also expected that more than just one type of reference material will be consulted. Regardless of the format or style used, **reports that include ONLY websites or software as references will be marked down**. For ideas on some bound reference material, a short list of possible bound references are included in the appendix.

The preceding points are a guide, reports are evaluated on content, other formats can be equally valid.

Presentation of the report is evaluated on care and neatness and not fanciness. A stack of 8-1/2 X 11 inch papers neatly aligned with oversized drawing carefully folded and placed with a staple in the top left corner will receive high marks for presentation. A colorful report folder or three ring binder with separate pocket for the cover sheet that has sheets in haphazard order, sections unclearly marked or oversized sheets randomly folded and placed within the report will receive low marks.

10. Engineering Software

West Point Bridge Design: There is free bridge design software available at **{** HYPERLINK http://bridgecontest.usma.edu/ **}**. The United States Military Academy sponsors a virtual bridge design contest and the West Point Bridge Design software is provided by them for all who would like to enter. This is a good tool for seeing some of the principles of bridge design modeled in a computer environment. This software is **not** a replacement for your own experiments. While research based on knowledge gained by the use of West Point Bridge Design is accepted as part of a broader scope of research, reports and designs that use it as the major or sole source of information will be marked down.

For more information on reports contact BMI for the complete rules. The brochure "Maryland Engineering Challenges for the Middle School: Teachers & Mentors Guide Book" contains the detailed report format, applicable to all of the competitions. At **{** HYPERLINK "http://www.thebmi.org" **}**, select the "Engineering Challenges" button in the green panel on the left for general and contact information.

11. Oral Reports

In the oral reports the students will be required to answer the questions that the judges may have as the result of reading the written reports, as well as discuss their approach to bridge design and their experiences with the project. Challengers will improve their scores by providing visual presentation materials for use during the oral report. As an additional hint, if challengers cannot

answer a question, they will do better by stating they do not know an answer and following up with information on where they would expect to find that answer.

Appendix A

Hazard Drawing

Test Fixture Drawing

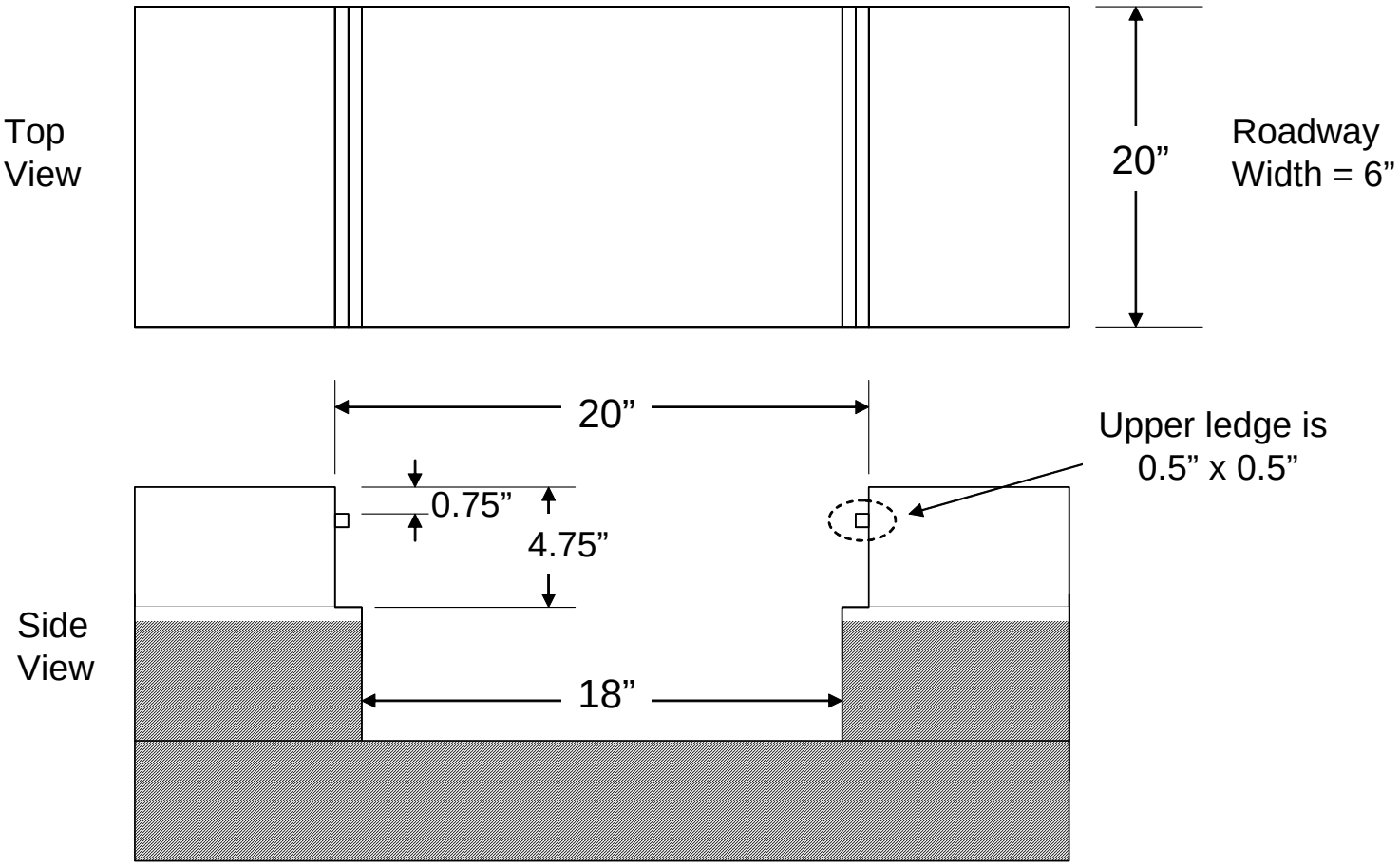

Hazard Structure for Straw Bridge Challenge.
Do not support bridge from hatchmarked areas.
Not to Scale

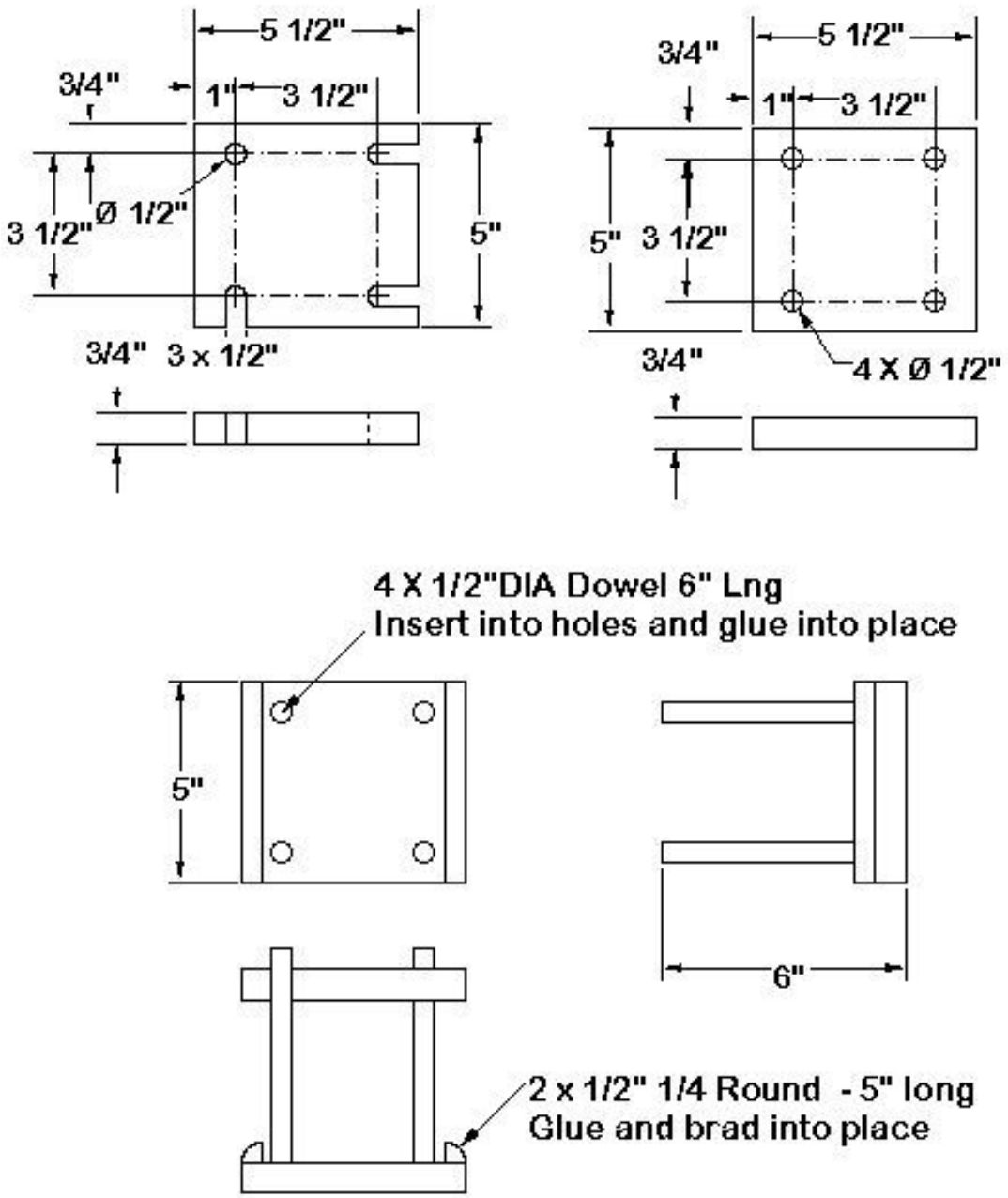

Straw Bridge Test Fixture

CDS
Niel Leon 1 Oct 1999
SK990927

Appendix B

Short List of Bound References

Adams, Richard C. and Peter H. Goodwin. Engineering Project for Young Scientists. New York, New York: Franklin Watts Publishing , 2001

Adkins, Jan. Bridges: From My Side to Yours. Connecticut: Roaring Book Press, 2002

Bennett, David. The Creation of Bridges. Edison, New Jersey: Chartwell Books, division of Book Sales, Inc., 1999

Brown, David. Bridges. New York, New York: MacMillan Publishing Company, 1993

Dunn, Andrew. Bridges. New York, New York: Wayland Publishers, Ltd., 1993

Glover, David. Make it Work! Building. New York, New York: Thomson Learning, 1994

Good, Keith. Build It! Activities for Setting Up Super Structures. Minneapolis, Minnesota: Lerner Publications Company, 1999

Graf, Bernhard. Bridges that Changed the World. Munich, Germany: Prestral Verlag, 2002

Johmann, Carol; Rieth, Elizabeth. Bridges! Amazing Structures to Design, Build and Test. Charlotte, VT: Williamson Publishing Co, 1999

Norris, Wilbur, Utku. Elementary Structural Analysis. New York, New York: McGraw-Hill Book Company, 1976

Oxlade, Chris. Superstructures: Bridges. Austin: Raintree Steck Vaughn Publishers, 1997

Salvadori, Mario. The Art of Construction. Chicago: Chicago Review Press Incorporated, 1990

Sturges, Philemon. Bridges Are to Cross. New York, New York: G.P. Putnam's Sons, 1998